PROVEN PERFORMANCE

Our customers span over 70 countries and cover diverse markets and industries.

Kinco® Automation

www.kincoautomation.com Email:sales@kincoautomation.com

(All trademarks and logos in this brochure are property of and registered by their respective owners.)

K1E16-2607

Kinco

VFD

Kinco KC200 General vector VFD

KC200 series

About us

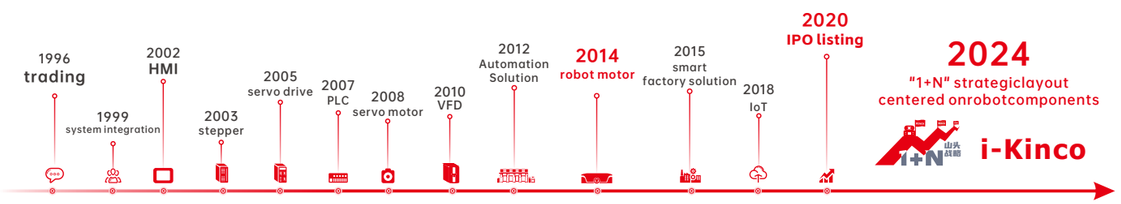

Kinco was founded in 1996, and successfully listed on the Shanghai Stock Exchange in 2020 (abbreviated name: Kinco share, stock code 688160), which is a high-tech, specialized and sophisticated enterprise that attaches great importance to independent research and development and innovation, mainly engaged in the research and development, production, sales and related technical services of industrial automation and robot core components and digital factory hardware and software.Leading Chinese supplier of motion control and human-machine interaction components for robotics and intelligent devices.

After years of continuous research and development and innovation, Kinco has established a complete product line with independent intellectual property rights, covering a series of products from machine iot to human-machine interaction, control, drive and execution, which are widely used in robots, medical equipment, logistics equipment, packaging equipment, food equipment, clothing equipment, environmental protection equipment, etc. New energy equipment, rail transit equipment and other automation equipment industry.

Based on the comprehensive industrial automation and digital technology platform, the company has in-depth application scenarios in the robot industry, providing display, control, drive and other multi-dimensional solutions for industrial mobile robots, collaborative robots, industrial robots, pan-service robots, and bionic robots. Through the insight of the industry pain points, deep links with robot customers, combined with the advantages of product research and development, the company continues to innovate, and launches industry-leading low-voltage servo products for mobile robots, integrated servo wheel, frameless torque motor for collaborative robots, robot human-machine interfaces, robot controllers and other products. The company has formed a relatively complete robot core parts capability, and after nearly 10 years of hard work in the robot industry, it has become a leading enterprise in the field of mobile robot low-voltage servo, and has a high brand influence in the industry.

Kinco has four research and development centers in Shanghai, Shenzhen, Changzhou and Chengdu, and two manufacturing bases in Shenzhen and Changzhou, a total of 10+ domestic marketing centers, 100+ domestic service providers, 40+ global partners, and products are exported to 70+ countries overseas. In terms of after-sales service, Kinco has established after-sales service centers in Shanghai, Shenzhen and Changzhou.

Four R&D centers and two manufacturing bases

Shanghai

Shenzhen

Changzhou

Chengdu

Shenzhen Manufacturing Center HMI, PLC, and drive systems

Changzhou Manufacturing Base Motor

Kinco KC200 series universal vector VFD

Kc200 is a universal vector VFD, mainly used to control and adjust the speed and torque of three-phase AC asynchronous motors.

Voltage level

1P 200~240V(-15~+10%) 0.4-2.2kW
3P 380V~480V(-15~+10%) 0.75-560kW

Terminal configuration

6 digital input terminals, 2 analog input terminals;
2 relay output terminals, 2 DO output terminals, 2 analog output terminals;
1 high-speed pulse input terminal (multiplexed with DI6 terminal), 1 high-speed pulse output terminal (multiplexed with DO2 terminal);
One 485 communication terminal and one CAN communication terminal.

Support optional 5V, 12V, 24V incremental PG card

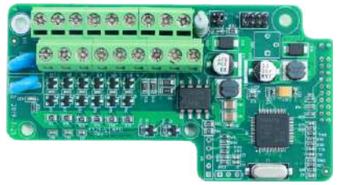

Telecommunication

Standard support 485 standard MODBUS communication protocol;
Standard support CAN-OPEN communication protocol.

Industry application

Light load, heavy load, and ultra -heavy load equipment such as lifting, cement, rubber tires, industrial water treatment, fan ventilation system, stirring, air -conditioning cooling system, woodworking machinery, etc.

Contents

03 KC200 characteristic
05 Naming rules&parameters
06 Technical parameters
07 Mechanical dimension diagram
09 Terminal function description and wiring diagram
12 Keyboard operation
13 KC200 accessories-filter

KC200 characteristic

Complete hardware solution

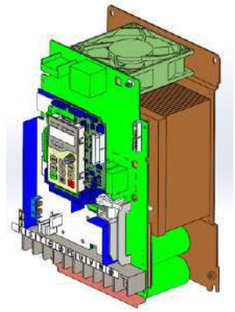

Complete hardware solution
Excellent heat dissipation:
Independent air duct design, close to the IGBT power device efficient cooling.
The temperature rise is lower, and+40℃ ~ +50℃ please use derated.

Wider applicability:
Wide voltage design:2S：Single phase 200V～240V 50Hz/60Hz；
4T/5T：Three phase 380V～480V 50Hz/60Hz.
With a wide voltage input range, the AC drive can be applied to more power standards and working environments, making it suitable for various types of power grids and power supply conditions at home and abroad.
The laboratory measured AC528V (AC480V+10%) input voltage environment can run stably at full load.

Simple is not simple, a variety of software adjustment functions

Multiple frequency source boot mode combination selection
Panel, analog, communication, pulse, PID, multi-segment speed and other frequency given channel selection,the main frequency, auxiliary frequency operation combination selection and frequency binding command channel and other intelligent functionsIt can flexibly meet the needs of users in different industrial scenarios.

Adapt to the complex power grid environment
Built-in AVR, overmodulation, instantaneous power loss without stopping and other functional designs to ensure the reliable operation of products in complex power grid environments. stable operation.

Excellent VF control
Support a variety of VF curves such as straight line, custom curve, decimal power and VF separation function, and carry out a new optimization on the VF on-load performance algorithm to achieve a minimum of 0.1Hz 150% load (laboratory data) stable operation.

High performance SVC control
Adaptive flux observation algorithm self-learning current loop parameters according to motor parameters
Can achieve stable operation with 150% load in the full speed range of the rated frequency (Laboratory data) .

Multi-scene adaptation

Closed loop control logic
The new optimized closed-loop control logic is paired with the specially developed PG feedback card, which supports the fast switching of TTL and HTL signals and uses the card to easily cope with a variety of scenarios.

New master-slave control logic
The new MODBUS or CAN communication is used for master-slave control, and can support up to 32 AC drive master-slave system control.

Dual motor control
Two control channels, support double motor step control logic, can achieve alternating control of double motors.

Support multiple communication modes
The whole series comes standard with Modbus-RTU and CAN-OPEN communication;

Communication parameter mapping function
The parameter address bit of the old AC drive in the PLC software can be quickly mapped to the new AC drive, which can easily cope with brand replacement or series iteration.

KC200 characteristic

Abundant inhibition protection function

Overcurrent inhibition protection waveform
Through real-time current monitoring, the automatic limit current cannot exceed the set overcurrent inhibition point；
In the case of large inertia or drastic changes in the load, it can also warn in advance to prevent overcurrent phenomenon.

Overvoltage inhibition protection
When the brake resistance is not connected, the operating frequency can be automatically adjusted or the magnetic flux braking can ensure that the AC drive will not cause overvoltage protection due to high bus voltage during operation.

Undervoltage inhibition protection
When the bus voltage drops instantaneously, the output frequency can be reduced to make the motor return energy to the inverter, which can realize the function of instantaneous power loss without stopping.

Wave by wave current limiting
The wave-by-wave current limit point limits the output current from rising too high to avoid overcurrent faults caused by sudden load or abnormal current.

Heat dissipation treatment
Built-in software automatically reduces carrier frequency processing according to temperature rise
Satisfy the AC drive efficient heat dissipation treatment and high temperature non-derating operation.

Overcurrent inhibition protection waveform

Overvoltage inhibition protection waveform

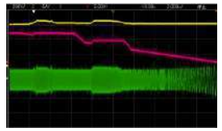

Undervoltage inhibition protection waveform

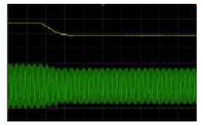

Wave by wave current limiting waveform

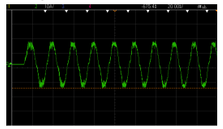

Many fault protection functions

Overvoltage , overcurrent fault protection
When the AC drive bus voltage and current are too high and exceed the set value, overvoltage and overcurrent fault protection will be detected to avoid damage to the frequency converter device.

Input open-phase , output open-phase
Detection of input phase deficiency based on bus voltage fluctuation. When the load is small, no phase fault is detected, when the load is large, the phase fault is detected, so as to avoid the damage of the AC drive rectifier bridge with large load when the phase is loss. There are two protection options: output phase loss detection before operation and output phase loss detection during operation.

Overload (AC drive, motor, pre-alarm)
The overload fault is detected based on the continuous running time at an overload point; When the AC drive and the motor exceed the overload time limit,the AC drive overload and motor overload fault will be reported;When the running time exceeds the corresponding overload time of the warning coefficient, the overload pre-alarm is reported to prevent damage to the AC drive and motor.

Phase-to-phase short circuit and ground short circuit fault
During power-on and before operation, the fault of phase-to-phase short circuit and ground short circuit can be detected quickly (within 10ms), and the AC drive damage caused by short circuit can be avoided to the greatest extent.

SVC stall fault
In SVC control mode, when the given speed and feedback speed error meet the set conditions, SVC stall fault is reported.
Inverter module overtemperature, parameter self-learning fault, current detection fault, and communication disconnection fault,etc.

KC200 service guarantee

Cost-effective
Our products are offered to customers with higher cost performance, ensuring that they can get quality and affordable products.By implementing effective cost control and supply chain optimization, we directly pass the advantages of saving cost to customers directly to customers

Products are more competitive-Fast delivery time
We handle orders quickly and efficiently, and take a series of measures to ensure that the goods can be delivered quickly to customers.We cooperate with reliable logistics partners, optimize the logistics process, and update the order status in a timely manner so that consumers can understand their logistics progress.

High quality service
We attach great importance to our customer experience and are committed to providing excellent services.
We have an experienced customer service team that can answer customer questions in time and provide solutions
We are committed to establishing a good cooperative relationship and ensuring that the satisfaction of customers is always satisfied.

Naming Rules&Parameters

KC200 series inverter naming rules

KC200 - 2 S - 0R40 G

① ② ③ ④ ⑤

① -Series
KC200: KC200 Series

② -Input voltage
2: AC220V
4: AC380V
5: AC440V

③ -Voltage level
S: Single-phase 200V～240V
T: Three-phase 380V～480V

④ -Adaptive motor power
0R40：0.4KW
01R5：1.5KW
...
0560：560KW

Note: R stands for decimal point

⑤ -Adaptive load
G: constant torque load

KC200 series inverter specifications and technical parameters

Inverter Model	power capacity kVA	Input Current A	Output Current A	Adaptive motor kW
Single-phase 200V～240V 50Hz/60Hz				
KC200-2S-0R40G	1	5.3	2.5	0.4
KC200-2S-0R75G	1.5	8.2	4	0.75
KC200-2S-01R5G	3	14	7.5	1.5
KC200-2S-02R2G	4	23	10	2.2
KC200-2S-03R7G	6.4	32	16	3.7
KC200-2S-05R5G	9.8	40	24.5	5.5
KC200-2S-07R5G	12.5	12.5	45	7.5
KC200-2S-0011G	19	70	46	11
Three-phase 380V～480V 50Hz/60Hz				
KC200-4T/5T-0R75G	1.5	3.4	2.3	0.75
KC200-4T/5T-01R5G	2.5	5	3.7	1.5
KC200-4T/5T-02R2G	3.6	5.8	5.5	2.2
KC200-4T/5T-03R7G	5.8	10.5	8.8	3.7
KC200-4T/5T-05R5G	8.6	14.5	13	5.5
KC200-4T/5T-07R5G	11	20.5	17	7.5
KC200-4T/5T-0011G	16.5	26	25	11
KC200-4T/5T-0015G	21	35	32	15
KC200-4T/5T-0018G	24.5	38.5	37	18.5
KC200-4T/5T-0022G	29.5	46.5	45	22
KC200-4T/5T-0030G	39.5	62	60	30
KC200-4T/5T-0037G	49.5	76	75	37
KC200-4T/5T-0045G	59	92	90	45
KC200-4T/5T-0055G	72.5	113	110	55
KC200-4T/5T-0075G	100	157	152	75
KC200-4T/5T-0090G	116	180	176	90
KC200-4T/5T-0110G	138	260	210	110
KC200-4T/5T-0132G	166	232	252	132
KC200-4T/5T-0160G	200	282	304	160
KC200-4T/5T-0185G	230	326	350	185
KC200-4T/5T-0200G	250	352	380	200
KC200-4T/5T-0220G	280	385	426	220
KC200-4T/5T-0250G	309	437	470	250
KC200-4T/5T-0280G	342	491	520	280
KC200-4T/5T-0315G	395	580	600	315
KC200-4T/5T-0355G	437.5	624	665	355
KC200-4T/5T-0400G	629	670	725	400
KC200-4T/5T-0450G	715	792	820	450
KC200-4T/5T-0500G	800	835	950	500
KC200-4T/5T-0560G	896	920	1020	560

KC200 series inverter technical specification

Item		Specification
Input	Rated voltage,Rated frequency	2S：Single phase 200V～240V 50Hz/60Hz；4T/5T：Three phase 380V～480V 50Hz/60Hz
	Allowable fluctuation range of voltage	-15～10%
	Allowable fluctuation range of frequency	±5%
Output	Output voltage	0～Input voltage
	Maximum output frequency	599Hz
	Overload capacity	G type machine: 150% rated current for 60s, 180% rated current for 3s
Main control performance	Motor control method	V/F control,Open loop vector control (SVC), Closed loop vector control (FVC)
	Modulation mode	Space vector PWM modulation
	Maximum carrier frequency	12kHZ
	Speed control range	Open loop vector control, rated load 1:100; Closed loop vector control, rated load 1:1000
	Steady speed accuracy	Open loop vector control: ±0.5% rated synchronous speed; Closed loop vector control: ±0.02% rated synchronous speed
	Starting torque	Open loop vector control: 150% rated torque at 0.5Hz; Closed loop vector control: 200% rated torque at 0Hz
	Torque response	Open loop vector control: < 20ms; Closed loop vector control: < 10ms
	Frequency accuracy	Digital setting: maximum frequency ×±0.01%; Simulation setting: Maximum frequency ×±0.2%
	Fequency resolution	Digital setting: 0.01Hz; Simulation setting: Maximum frequency × 0.05%
	Torque boost	Automatic torque boost; Manual torque is increased by 0.1% ～30.0%
Product basic functions	DC braking capability	Starting frequency: 0.00Hz ～50.00Hz Braking time: 0.0s ～ 60.0s Braking current value: 0% ～ 100% rated current
	V/F curve	Four modes: 1 user set V/F curve mode and 3 torque reduction characteristic curve mode
	Acceleration/ deceleration curve	Straight-line or S-curve acceleration/deceleration;Four groups of acceleration/deceleration time
	Multi-speed running	The product supports up to 16 speeds with the control terminal
	Built-in PID	The function facilitates closed-loop control of process control.
	Auto voltage regulation	When the mains voltage changes, the output voltage keeps constant automatically.
	Overvoltage/overcurrent stall control	Automatic current and voltage limit during operation to prevent frequent overvoltage trip
	Fast current limit	Minimize overcurrent faults and protect the normal operation of the drive
	Instantaneous power failure processing	The load feedback energy compensates for the voltage reduction in the transient power outage and keeps the driver running for a short time
	Running command	Operation panel given, control terminal given, communication control, which can be switched through a variety of ways
	Frequency reference	Digital setting, analog voltage setting, analog current setting, pulse setting, communication setting
	Auxiliary frequency setting	Realize flexible auxiliary frequency fine-tuning and frequency synthesis
	Input terminal	Six digital input terminals, one of which supports high-speed pulse input up to 100KHz; Two analog input terminals, one of which supports 0 ～ 10V/0 ～ 20mA input
	Output terminal	Two analog output terminals, both supporting 0 ～10V/0 ～20mA output;2 digital output terminals, one of which supports 0.1kHz ～ 100kHz pulse square wave signal output, which can realize the output of physical quantities such as set frequency and output frequency.2 sets of relay output terminals
	Communication	One 485 communication terminal, one CAN communication terminal
Keyboard display	LED display	Single line 5-bit nixie tube, built-in keyboard and external keyboard
	Parameter copy	The external keyboard supports uploading and downloading the function parameter information of the AC drive to achieve fast parameter setting
	Condition monitoring	20 parameters such as set frequency, output frequency, output voltage and output current can be displayed
	Fault Alarm	Overvoltage, undervoltage, overcurrent, short circuit, phase loss, overload, overheating, etc
Protect function	Phase absence protection	Input phase loss protection, output phase loss protection
	Over-voltage protection	The main circuit stops when the DC voltage is above 800V
	low-voltage protection	The main circuit stops when the DC voltage is below 350V
	Overheat protection	Trigger protection when the AC drive bridge overheats
	Overload protection	Overload operation, to reach the overload time stop
	Over-current protection	Stop if the AC drive exceeds 2.5 times the rated current
	Short circuit protection	Output interphase short-circuit protection, output short-circuit protection to the ground
Environment	Installation site	In the altitude area of more than 1000 meters, due to the thin air caused by the poor heat dissipation effect of the AC drive, it needs to be derated, and 1% derated for every 100m rise
	Temperature, humidity	-10℃～+50℃, +40℃～+50℃ please use derated, 5%RH ～ 95%RH (no condensation)
	Vibration	Less than 5.9m/s^2 (0.6g)
	Storage temperature	-20℃～+60℃
	Protection grade	IP20
	Installation Method	Wall mounted

KC200 series inverter mechanical dimensions (unit:mm)

KC200-2S-02R2G～KC200-4T/5T-0045G and below power inverters

Note: when installing, keep enough space, the upper and lower space is recommended to keep >100mm, the left and right space is recommended to keep > 25mm

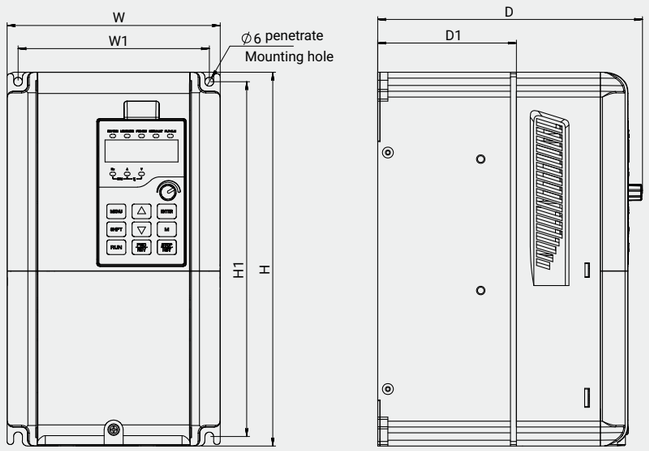

Inverter Model G: constant torque load	Profile and mounting size (mm)							Approximate weight(Gross weight, kg)
	W	H	D	W1	H1	D1	Mounting hole d	
KC200-2S-0R40G	126	186	167	115	175	78	4.7	2
KC200-2S-0R75G								
KC200-2S-01R5G								
KC200-2S-02R2G								
KC200-4T/5T-0R75G								
KC200-4T/5T-01R5G								
KC200-4T/5T-02R2G								
KC200-4T/5T-03R7G								
KC200-2S-03R7G	146	256	181	131	243	95	6	6
KC200-2S-05R5G								
KC200-4T/5T-05R5G								
KC200-4T/5T-07R5G								
KC200-4T/5T-0011G								
KC200-2S-07R5G	170	320	207	151	303	118.5	5.8	8
KC200-2S-0011G								
KC200-4T/5T-0015G								
KC200-4T/5T-0018G								
KC200-4T/5T-0022G								
KC200-4T/5T-0030G	225	360	224	206	342	130	6.5	9
KC200-4T/5T-0037G								
KC200-4T/5T-0045G								

KC200 series inverter mechanical dimensions (unit:mm)

KC200-4T-0055G~KC200-4T-0132G

Note: when installing, keep enough space, the upper and lower space is recommended to keep >100mm, the left and right space is recommended to keep > 25mm

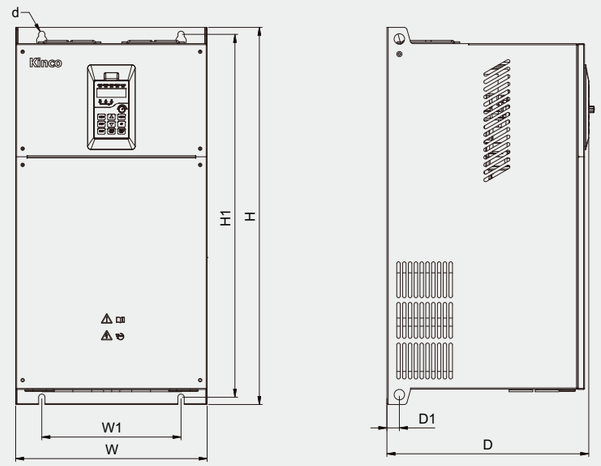

Inverter Model G: constant torque load	Profile and mounting size (mm)							Approximate weight (Gross weight, kg)
	W	H	D	W1	H1	D1	Mounting hole d	
KC200-4T/5T-0055G	285	617	258	220	596	132	10	35
KC200-4T/5T-0075G								
KC200-4T/5T-0090G	320	639	317	240	620	152	11	60
KC200-4T/5T-0110G								
KC200-4T/5T-0132G								

KC200 series inverter mechanical dimensions（unit:mm）

KC200-4T/5T-0160G～KC200-4T/5T-0560G

Note: when installing, keep enough space, the upper and lower space is recommended to keep >100mm, the left and right space is recommended to keep > 25mm

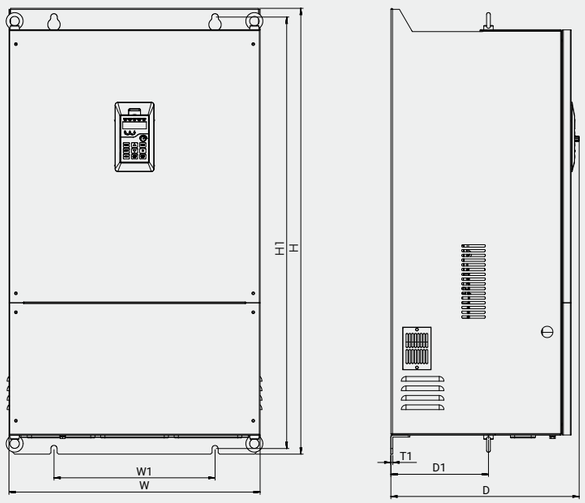

Inverter Model G: constant torque load	Profile and mounting size (mm)							Approximate weight(Gross weight, kg)
	W	H	D	W1	H1	D1	Mounting hole d	
KC200-4T/5T-0160G	530	940	385	340	910	206	14	114
KC200-4T/5T-0185G								
KC200-4T/5T-0200G								
KC200-4T/5T-0220G	690	1006	380	500	974	207	14	156
KC200-4T/5T-0250G								
KC200-4T/5T-0280G								
KC200-4T/5T-0315G	810	1228	400	520	1196	209	14	225
KC200-4T/5T-0355G								
KC200-4T/5T-0400G								
KC200-4T/5T-0450G	810	1328	401.5	520	1296	209	14	225
KC200-4T/5T-0500G								
KC200-4T/5T-0560G								

KC200 series terminals function description

Category	Terminal silk screen	Name	Terminal function description	Specification
Shield	⏚	Shield ground	Used for terminal wiring shield grounding. The shielding layers of analog signal lines, 485/CAN communication lines, and motor cables can be connected to this terminal.	Internally connected to the main circuit terminal PE
Power supply	+10V	+10V power supply	Reference ground for analog signals and +10V power supply	The maximum allowable output current is 10mA
	GND	+10V power ground	Reference ground for analog signals and +10V power supply	Internally isolated from COM
Simulate input	AI1	Analog single-ended input AI1	Accepts single-ended input of analog voltage or current. The voltage/current input is selected by jumper AI1 on the control board (reference ground: GND)	12-bit resolution Input voltage/current range: 0 ~ 10V/0 ~ 20mA Input impedance at voltage input: 20kΩ Input impedance for current input: 500Ω
	AI2	Analog single-ended input AI2	Accepts single-ended input of analog voltage or current. The voltage/current input is selected by jumper AI2 on the control board (reference ground: GND)	
Simulate output	AO1	Analog output 1	Provides analog voltage/current output. The output voltage and current are selected by jumper AO1 on the control board. The factory default output voltage is shown in the description of function code F11.00 (reference ground: GND).	Voltage output range: 0~10V Current output range: 0/4~20mA
	AO2	Analog output 2	Provides analog voltage/current output. The output voltage and current are selected by jumper AO2 on the control board. The factory default output voltage is shown in the description of function code F11.01 (reference ground: GND).	Voltage output range: 0~10V Current output range: 0/4~20mA
Communication	RS485+	RS485 communication interface	485 differential signal positive terminal	Standard RS485 communication interface.
	RS485-		485 differential signal negative terminal	Use twisted pair or shielded twisted pair
	CANH	CAN communication interface	CAN high level terminal	Use twisted pair or shielded twisted pair
	CANL		CAN low level terminal	
Multifunction input terminal	DI1	Multifunction input terminal 1	DI1～DI6 can be programmably defined as switching input terminals with multiple functions. DI6 can also be used as a high-speed pulse input terminal. For details, see function parameters F08.00～F08.05.	Compatible with bipolar input, support NPN and PNP connection, active level input voltage range: 9V～30V. DI-DI5 is a low-speed input with an input impedance of 4.7kΩ and a maximum input frequency of 200Hz. DI6 as a high-speed input, input impedance 2.2kΩ, maximum input frequency 100kHz
	DI2	Multifunction input terminal 2		
	DI3	Multifunction input terminal 3		
	DI4	Multifunction input terminal 4		
	DI5	Multifunction input terminal 5		
	DI6	Multifunction input terminal 6		
Multifunction Output terminal	DO1	Open collector Output terminal	It is programmable and defined as a switching output terminal with multiple functions. For details, see function parameter F10.00 (common terminal: COM)	Maximum working voltage: 30V. Maximum output current: 50mA
	DO2	High speed pulse output terminal	Can be used as high-speed pulse output terminal;It can also be used as an open collector output terminal, see functional parameter F11.02 (common end: COM)	High-speed pulse output maximum frequency 100kHz;
Power supply	＋24V	＋24V Power supply	Provides external +24V power supply, which can be used as working power supply for digital input and output terminals and external sensor power supply.	Maximum output current: 200mA
Common terminal	OP	Multifunction input common end	The factory default is short-circuited with +24V. When using external signals to drive DI1～DI6, the OP needs to be connected to the external power supply and disconnected from the +24V power terminal.	Common terminal of DI1～DI6
	COM	24V power supply common end	There are 2 common terminals in total, used in conjunction with other terminals	COM and GND are internally isolated
Relay output terminals (2 sets)	TA1/TB1/TC1 TA2/TB2/TC2	Relay output	Programmable relay output terminals defined as multiple functions, see function parameter F10.02 for details	TA1-TB1,TA2-TB2: normally closed, TA1-TC1,TA2-TC2: normally open,contact capacity: AC 250V/3A DC 30V/1A

KC200 series electrical wiring diagram

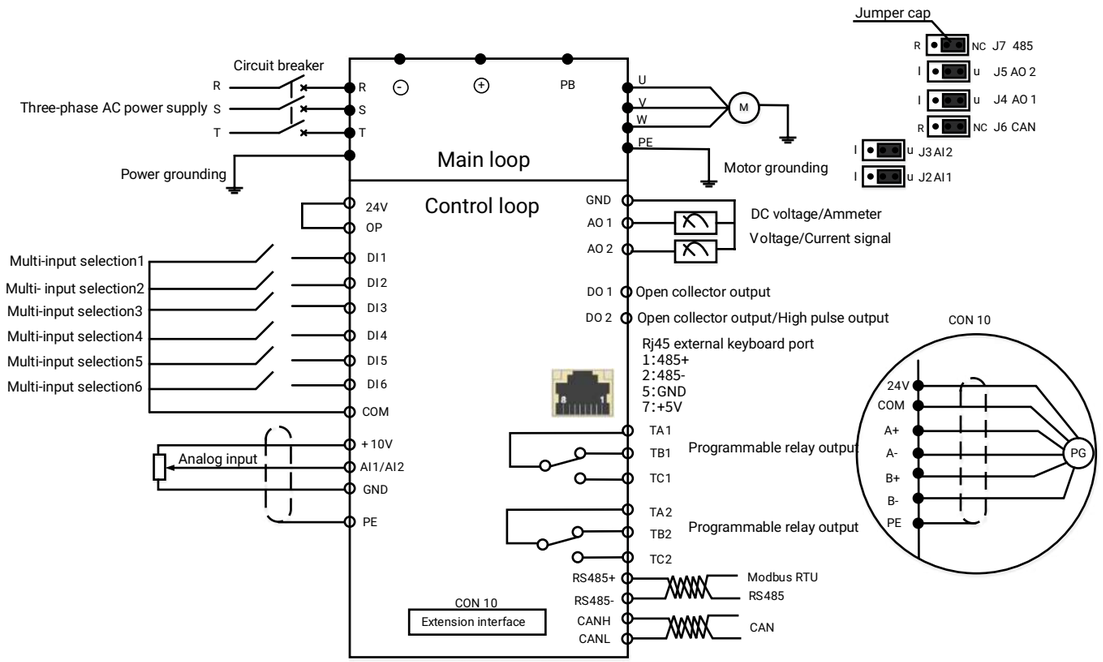

Keyboard operation

Externalreference operation panel

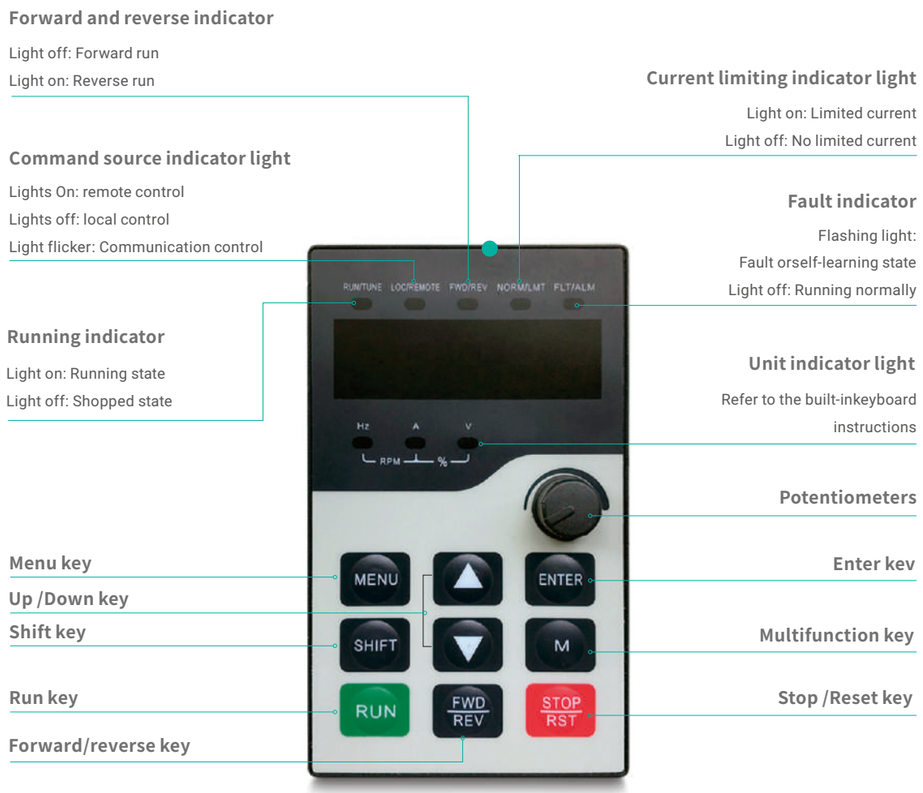

KC200 Accessories

EMC filter selection

Inverter Model	Power(kW)	Specification	Rated current(A)	Order number
Single-phase 200V～240V 50Hz/60Hz				
KC200-2S-0R40G	0.4	ME440-5	5	1340300007
KC200-2S-0R75G	0.75	ME440-10	10	1340300017
KC200-2S-01R5G	1.5	ME440-20	20	1340300016
KC200-2S-02R2G	2.2	ME440-20	20	1340300016
KC200-2S-03R7G	3.7	ME710-30	30	1340300051
KC200-2S-05R5G	5.5	ME710-40	40	1340300052
KC200-2S-07R5G	7.5	ME710-50	50	1340300053
KC200-2S-0011G	11	ME710-75	75	1340300054
Three-phase 380V～480V 50Hz/60Hz				
KC200-4T/5T-0R75G	0.75	ME466-5	5	1340300018
KC200-4T/5T-01R5G	1.5	ME466-5	5	1340300018
KC200-4T/5T-02R2G	2.2	ME466-10	10	1340300001
KC200-4T/5T-03R7G	3.7	ME466-10	10	1340300001
KC200-4T/5T-05R5G	5.5	ME466-20	20	1340300015
KC200-4T/5T-07R5G	7.5	ME466-20	20	1340300015
KC200-4T/5T-0011G	11	ME920-30	30	1340300022
KC200-4T/5T-0015G	15	ME920-30	30	1340300022
KC200-4T/5T-0018G	18.5	ME920-45	45	1340300013
KC200-4T/5T-0022G	22	ME920-45	45	1340300013
KC200-4T/5T-0030G	30	ME920-75	75	1340300020
KC200-4T/5T-0037G	37	ME920-75	75	1340300020
KC200-4T/5T-0045G	45	ME920-100	100	1340300011
KC200-4T/5T-0055G	55	ME920-120	120	1340300003
KC200-4T/5T-0075G	75	ME920-150	150	1340300005
KC200-4T/5T-0090G	90	ME920-200	200	1340300012
KC200-4T/5T-0110G	110	ME920-250	250	1340300009
KC200-4T/5T-0132G	132	ME920-300	300	1340300024
KC200-4T/5T-0160G	160	ME920-300	300	1340300024
KC200-4T/5T-0185G	185	ME920-420	420	1340300010
KC200-4T/5T-0200G	200	ME920-420	420	1340300010
KC200-4T/5T-0220G	220	ME920-420	420	1340300010
KC200-4T/5T-0250G	250	ME920-500	500	1340300021
KC200-4T/5T-0280G	280	ME920-600	600	1340300008
KC200-4T/5T-0315G	315	ME920-600	600	1340300008
KC200-4T/5T-0355G	355	ME920-800	800	1340300014
KC200-4T/5T-0400G	400	ME920-800	800	1340300014
KC200-4T/5T-0450G	450	ME920-1000	1000	1340300006
KC200-4T/5T-0500G	500	ME920-1000	1000	1340300006
KC200-4T/5T-0560G	560	ME920-1100	1100	1340300023

Reactor selection

Model	Power(kW)	Specification	Rated current(A)	Rated inductance(mH)
KC200-4T/5T-0055G	55	DSL-0200-04SA-EM24	200	1340400004
KC200-4T/5T-0075G	75	DSL-0200-04SA-EM24	200	1340400004
KC200-4T/5T-0090G	90	DSL-0200-04SA-EM24	200	1340400004
KC200-4T/5T-0110G	110	DSL-0350-04ST-EM14	350	1340400008
KC200-4T/5T-0132G	132	DSL-0350-04ST-EM14	350	1340400008
KC200-4T/5T-0160G	160	DSL-0500-04ST-E60U	500	1340400005
KC200-4T/5T-0185G	185	DSL-0500-04ST-E60U	500	1340400005
KC200-4T/5T-0200G	200	DSL-0500-04ST-E60U	500	1340400005
KC200-4T/5T-0220G	220	DSL-0650-04ST-E50U	650	1340400001
KC200-4T/5T-0250G	250	DSL-0650-04ST-E50U	650	1340400001
KC200-4T/5T-0280G	280	DSL-0850-04ST-E40U	850	1340400003
KC200-4T/5T-0315G	315	DSL-0850-04ST-E40U	850	1340400003
KC200-4T/5T-0355G	355	DSL-1000-04ST-E35U	1000	1340400007
KC200-4T/5T-0400G	400	DSL-1000-04ST-E35U	1000	1340400007
KC200-4T/5T-0450G	450	DSL-1200-04ST-E30U	1200	1340400006
KC200-4T/5T-0500G	500	DSL-1200-04ST-E30U	1200	1340400006
KC200-4T/5T-0560G	560	DSL-1200-04ST-E30U	1200	1340400006

Note: 55kW and above power frequency converters need to be equipped with corresponding reactors.

Expansion Card

Picture	Specification	Description	Order number
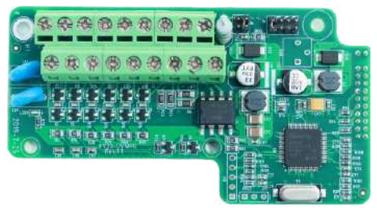	KC200-UVWPG	Incremental PG expansion card. Supports ABZ and UVW encoders	3030400116

Other Optional Accessories

Name	Specification	Order number
External keyboard (without installation box)	KEY_NET	2030100054
External keyboard (with installation box)	KC100_NETKEY	3030300079
Keyboard tray component	FV20-KB-tray	1040100051
10-pin network port extension cable	KC200-10PIN cable L=3000	1410400002